LO21

Lock-out relay for swing doors with overhead presence sensors

(US version)

Visit website for available languages of this document.

DESCRIPTION

1. Red LED
2. Green LED
3. DIP switches

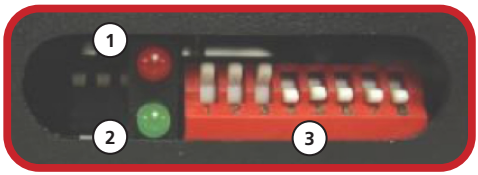

ANSI/BHMA 156.10-2005 requires the use of a sensor or photobeam on the swing side of the door when using a header-mounted, safety sensor (e.g. Bodyguard or DK12). For more information, reference the ANSI 156.10 standard.

TECHNICAL SPECIFICATIONS

Power Supply:	12 – 24 VAC / 15 – 24 VDC
Operating Frequency:	4 MHz (microprocessor)
Power Consumption:	10 mA at rest (50 mA max)
Output:	2 x SPST relays
Max. Voltage (relay contact):	60 VDC, 120 VAC
Max. Current (both relay contcats):	2A DC, 0.5A AC

Specifications are subject to change without prior notice.
All values measured in specific conditions.

PRECAUTIONS

CAUTION

- ❑ Shut off all power going to header before attempting any wiring procedures.
- ❑ The door control system and the header cover profile must be correctly grounded.
- ❑ Maintain a clean and safe environment when working in public areas.
- ❑ Constantly be aware of pedestrian traffic around the door area.
- ❑ Always stop pedestrian traffic through the doorway when performing tests that may result in unexpected reactions by the door.
- ❑ *ESD (electrostatic discharge)*: Circuit boards are vulnerable to damage by electrostatic discharge. Before handling any board, ensure you dissipate your body's ESD charge.
- ❑ Always check placement of all wiring before powering up to ensure that moving door parts will not catch any wires and cause damage to equipment.
- ❑ Ensure compliance with all applicable safety standards (i.e. ANSI A156.10) upon completion of installation.
- ❑ DO NOT attempt any internal repair of the components. All repairs and/or component replacements must be performed by BEA, Inc. Unauthorized disassembly or repair:
  1. May jeopardize personal safety and may expose one to the risk of electrical shock.
  2. May adversely affect the safe and reliable performance of the product resulting in a voided warranty.
- ❑ Always test the proper operation of the installation before leaving the premises.
- ❑ Only trained and qualified personnel are recommended to install and set up the sensor.

MOUNTING & WIRING

All LO21 wiring must be accomplished with the module unplugged. If the red / white striped and white wires (data wires) touch each other when power is applied, damage to the unit will result.

WIRING TO MICROCELL

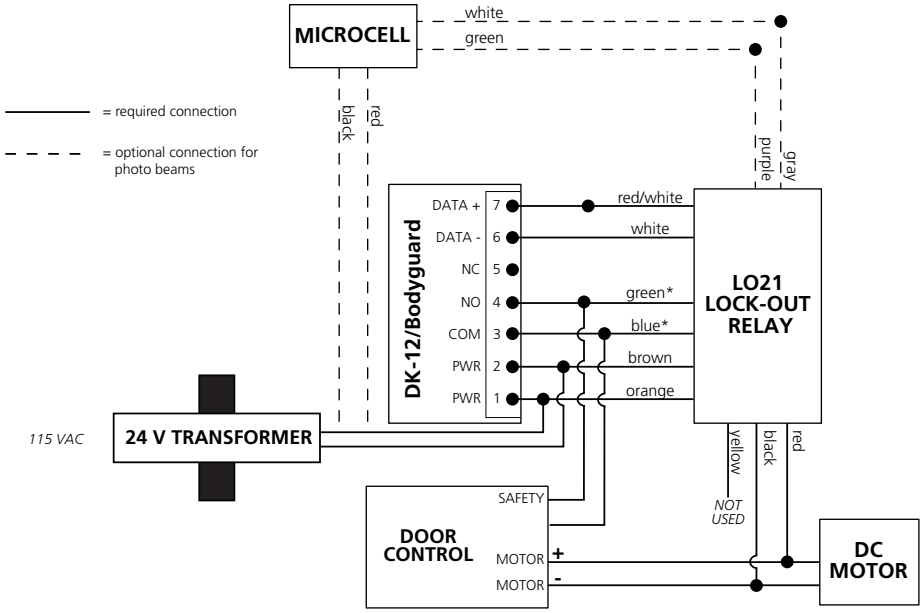

* *If using safety beams, blue and green wires must be wired in parallel with the Bodyguard/DK-12 connection to the SAF and COM of the door control.*

If using dry contact safety beams, such as BEA's Microcell, remember these changes:

- Power the safety beams with the same transformer that is used for the LO21.
- The black/white striped wire is not used and should be taped off.
- The gray and purple wires of the LO21 go to the NO and COM dry contacts of the safety beams.

HYDRAULIC UNIT / AC MOTOR

If AC voltage is > 50 VAC, use the provided 10,000 Ohm resistor to wire in-line with the red wire.

Below are examples of a Keane Monroe Series 2000 swing-door operator.

WIRING TO HYDRAULIC UNIT

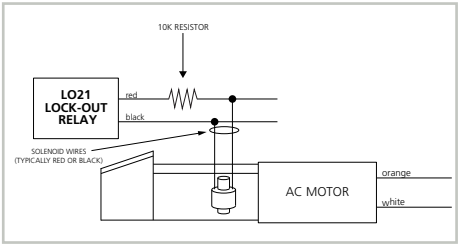

WIRING TO AC MOTOR

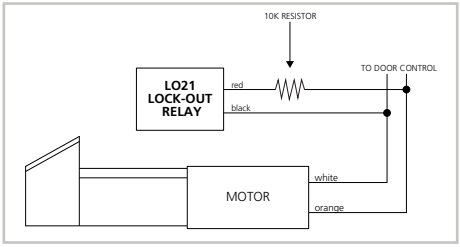

SETUP / PROGRAMMING

VERIFY OPERATION

1. Upon powering, verify red LED when door is in closing cycle. If it does not:
   - DC units: Reverse the red and black wires from LO21 to motor.
   - AC units: Verify AC power is being switched on and off at point of connection for red and black wires.
   - Safety beams present: Verify green LED illuminates and turns off when beams are blocked (and unblocked, respectively).

2. If Bodyguard learns "door closed," but not "door open":
   a. Place door in open position.
   b. Using BEA remote control, unlock Bodyguard and press Magic Wand and then "2".
   c. If Bodyguard does not flash green, improper data is being sent for "door open" position (see below for correct voltage).

   0 VDC = closed door / 8 VDC = closing door / 12 VDC = open door

   d. Verify voltages as listed above, and refer to the Bodyguard User's Guide, if necessary.

3. Adjust Time Delay, if necessary, by changing DIP switch settings. These can be set for a time delay of 0 – 31 seconds. *See following page for specific DIP switch settings.*
   - Time Delay begins when motor starts rotating to close door. *Time Delay DOES NOT stop counting if motor rotation stops. Time Delay is only interrupted when door reactivates or safety beams are broken.*
   - must be set to ensure that red LED remains on for entire "door closing" cycle; red LED must turn off after door reaches jamb
   - Time Delay must be adjusted as necessary when door speed is adjusted

DIP SWITCH SETTINGS

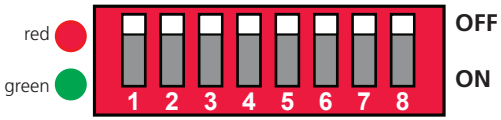

LO21 LED INDICATORS:

red LED = lockout time; *LED is on when door is in "closing" cycle*

green LED = signal detection from safety beams

TIP WHEN SETTING TIME DELAY:

If the red LED on the Bodyguard illuminates while the door is in "closing" cycle, it is probably seeing the door at the last degree or two of closing. Try increasing the time delay by one second.

	* = DIP ON				
TIME DELAY	1	2	3	4	5
1	*				
2		*			
3	*	*			
4			*		
5	*		*		
6		*	*		
7 (def)	*	*	*		
8				*	
9	*			*	

	* = DIP ON				
TIME DELAY	1	2	3	4	5
10		*		*	
11	*	*		*	
12			*	*	
13	*		*	*	
14		*	*	*	
15	*	*	*	*	
16					*
17	*				*
18		*			*
19	*	*			*
20			*		*

	* = DIP ON				
TIME DELAY	1	2	3	4	5
21	*		*		*
22		*	*		*
23	*	*	*		*
24				*	*
25	*			*	*
26		*		*	*
27	*	*		*	*
28			*	*	*
29	*		*	*	*
30		*	*	*	*
31	*	*	*	*	*

©BEA | Original Instructions | PLEASE KEEP FOR FURTHER USE - DESIGNED FOR COLOR PRINTING

TROUBLESHOOTING

Red LED does not illuminate during "closing" cycle **OR** red LED illuminates in latch check	Red and black wires are reversed (polarity sensitive)	Reverse the polarity of the moror wires.
	AC motor application: in-line resistor not installed	Install in-line resistor on red wire of LO21 (AC motors only).
	Faulty input power or data	Check voltage supply to LO21 (12 – 24 VAC / 15 – 24 VDC).
		Check voltage on orange, brown, red, and black wires.
Door will not open or close (green LED is on)	Lockout safety beams are blocked	1. Remove any obstructions with safety beam path.
	Faulty safety beam receiver or transmitter	2. Check all wiring related to safety beams.
	Faulty power supply to safety beam	3. Test the safety beams for proper operation.
	Faulty safety beam wiring	
Door will not re-cycle open when activated during "closing" cycle	Lockout time is not long enough (red LED goes out before door is fully closed)	Increase lockout time. Refer to DIP switch chart.
	Data wires reversed at Bodyguard/ DK-12	Reverse data wires at Bodyguard/DK12.
		Check voltage on data wires (red and red/ white).
Green LED does not illuminate when safety beams are blocked	Faulty safety beam receiver	Test the beams and LO21 with multi-meter.
	Faulty connection on purple and gray wire from LO21	Make contact with the purple and gray wires. Green LED should illuminate.
Improper voltage reading on data lines at LO21	Incorrect wiring at LO21	Verify correct polarity at terminals 6 and 7 on Bodyguard.
	Faulty LO21	If data line voltage remains constant at LO21 for open and close dpositions and all wiring verified, replace faulty LO21.

BEA, INC. INSTALLATION/SERVICE COMPLIANCE EXPECTATIONS

BEA, Inc., the sensor manufacturer, cannot be held responsible for incorrect installations or incorrect adjustments of the sensor/device; therefore, BEA, Inc. does not guarantee any use of the sensor/device outside of its intended purpose.

BEA, Inc. strongly recommends that installation and service technicians be AAADM-certified for pedestrian doors, IDA-certified for doors/gates, and factory-trained for the type of door/gate system.

Installers and service personnel are responsible for executing a risk assessment following each installation/service performed, ensuring that the sensor/ device system performance is compliant with local, national, and international regulations, codes, and standards.

Once installation or service work is complete, a safety inspection of the door/gate shall be performed per the door/gate manufacturer's recommendations and/or per AAADM/ANSI/DASMA guidelines (where applicable) for best industry practices. Safety inspections must be performed during each service call – examples of these safety inspections can be found on an AAADM safety information label (e.g. ANSI/DASMA 102, ANSI/DASMA 107, UL294, UL325, and International Building Code).

Verify that all appropriate industry signage, warning labels, and placards are in place.

Tech Support & Customer Service: 1-800-523-2462
General Tech Questions: techservices-us@BEAsensors.com | Tech Docs: www.BEAsensors.com