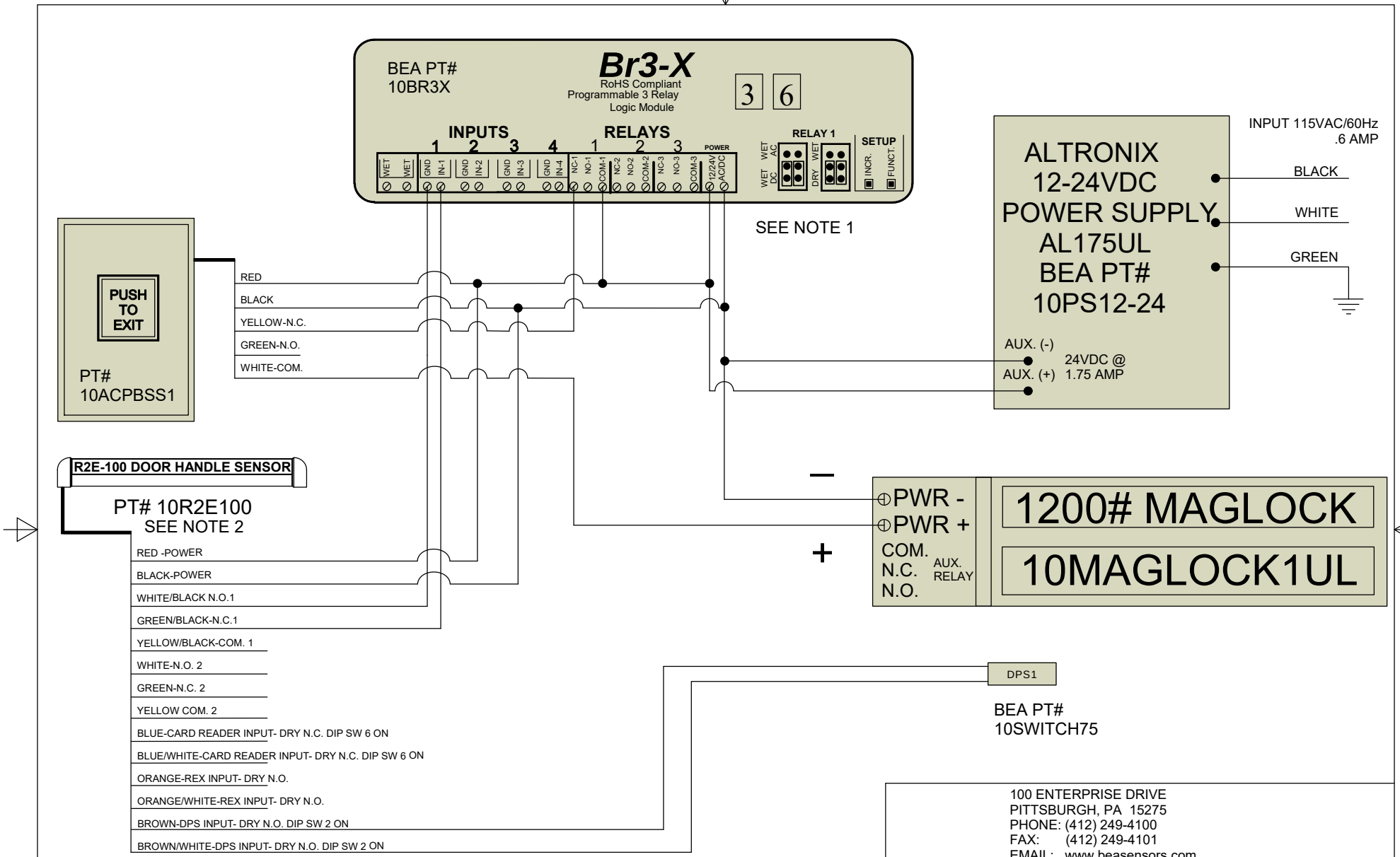

NOTES:
1) SEE BR3-X USER'S GUIDE PAGE 7 FOR WIRING AND PROGRAMMING FUNCTION 36. RELAY 2 CAN BE USED TO ACTIVATE AN AUTOMATIC DOOR IF NEEDED.
2) SEE R2E-100 USER'S GUIDE FOR MORE INFORMATION.

IF AFTER TROUBLESHOOTING A PROBLEM, A SATISFACTORY SOLUTION CANNOT BE ACHIEVED, PLEASE CALL B.E.A., INC. FOR FURTHER ASSISTANCE DURING EASTERN STANDARD TIME AT 1-800-523-2462 FROM 8AM - 5PM. FOR AFTER-HOURS, CALL EAST COAST: 1-866-836-1863 OR 1-800-407-4545 / MID-WEST: 1-888-308-8843 / WEST COAST: 1-888-419-2564. DO NOT LEAVE ANY PROBLEM UNRESOLVED. IF YOU MUST WAIT FOR THE FOLLOWING WORKDAY TO CALL B.E.A., LEAVE THE DOOR INOPERABLE UNTIL SATISFACTORY REPAIRS CAN BE MADE. NEVER SACRIFICE THE SAFE OPERATION OF THE AUTOMATIC DOOR OR GATE FOR AN INCOMPLETE SOLUTION.WEB: WWW.BEASENSORS.COM

100 ENTERPRISE DRIVE
PITTSBURGH, PA 15275
PHONE: (412) 249-4100
FAX: (412) 249-4101
EMAIL: www.beasensors.com

TITLE: ACCESS CONTROL PACKAGE 1 (10ACP12)

SIZE:	DRAWN BY:	REV BY:	PART NO:
A	WJR	WJR	80.0411.00
	SCALE: NONE	DATE: 08/27/2018	SHEET 1 OF 1