DOOR♦GARD™ FEATURES AND PROGRAMMING GUIDE COMMAND AND CONTROL SERIES

DOOR♦GARD COMMAND AND CONTROL SERIES keypads offer field proven reliability and cost effective solutions anywhere limited control or access is desired. Designed for individual control of up to four devices, Door♦Gard Command and Control Series keypads are the perfect choice for controlling electric locking devices, security systems, automatic operators or machinery. Door♦Gard keypads accept power from a 12 or 24 Volt AC/DC supply.

FEATURES:

- 4 INDEPENENT OUTPUTS
- 4 INDEPENENT TIMERS
- ALL OUTPUTS ASSIGNABLE BY CODE
- ON BOARD MAIN RELAY
- 120 USERS
- REMOTE TRIGGERING INPUT
- KEYPAD PROGRAMMABLE

MEMORY
Non-volatile EEPROM memory means your codes and instructions will be there whether you remove power for 5 minutes or 5 years.

PROGRAMMING
All programming is done entirely from the front of the keypad. LED or sounder guidance makes programming easy. It takes seconds for an authorized user to change codes.

CODES
The Door♦Gard Command and Control keypads allow up to 120 individual user codes. Codes can be 1 to 6 digits in length and digits may be repeated. The Master Code is always stored in user location one (1).

MAIN RELAY
The main relay is a form C relay, which you can program as a timed output (1 to 90 seconds) or to toggle (latch). See the Wiring Diagram and Specifications for the relay electrical specifications.

AUXILIARY OUTPUTS
You can program these outputs as timed outputs (1 to 90 seconds) or to toggle (latch). They can be controlled individually or in combination by a code. Some models have 1 Amp form C relays and other models have negative voltage outputs with a 50mA sink.*

PANIC
Panic is activated by pressing the * and # keys at the same time. By default, it operates output 4 and activates for 1 second.

REMOTE TRIGGERING INPUT (REX)
By default, upon a momentary closure this normally open loop triggers the main relay for the same time period as the Master Code. You can also program the REX to operate any combination of the available outputs. The auxiliary outputs activate for their programmed time.

KEYPRESS FEEDBACK/AUDIBLE KEYPRESS
Door♦Gard Command and Control keypads, by default, acknowledge a keypress by momentarily illuminating the yellow LED or activate the sounder. This depends on the model. You can turn this off through programming.

KEYPAD ACTIVE OUTPUT
Door♦Gard Command and Control keypads can be programmed to energize a voltage output whenever a key is touched. You can use this to turn on lights, CCTV camera, or notify a guard. This output is not available if you are using the IEI 250 Printer Interface.

AUTO ENTRY
This feature is used when you don't want to press the * key after entering your code. You only need to enter your code number (without pressing *) and the relay activates. To use this feature, the user codes must be the same length as the master code. Please remember to access program mode when auto entry is on, do not press the * key (Press: 99 # master code), however the * is required while entering programming commands.

AUDIT TRAIL
Using the 250 Printer Interface (not included), you can get an accurate real-time audit trail. Up to 8 keypads can be monitored simultaneously. The 250 comes with a power supply and a printer cable and it easily connects to any parallel printer. This output is not available on all models.

***Voltage Outputs may be converted to 1 Amp, Form-C relays by adding the 293 Auxiliary Relay Board (Model # 0219000).**

1

TESTING THE KEYPAD

1. Connect the positive (+) lead of your power supply to the terminal strip (TS1) V+ input.

2. Connect the negative (-) lead of your power supply to the terminal strip (TS1) V- input.

3. Turn on your power supply.

4. Press 7890#123456 *. If all 12 keypresses are verified, the keypad enters self-test mode. The yellow LED flashes/sounder beeps 3 times, then turns on solid for 3 seconds.

   Note: Self-test mode can be used to troubleshoot a keypad in the field. If you do not get the continuous light, the memory has been corrupted and should be re-programmed with the default command (see option #19).

5. Enter the master code (default = 1234) followed by the * key and the relay energizes. Refer to programming section to program your keypad.

NOTE:

You can program your keypad in your shop or at the installation site. Programmed information is stored in non-volatile memory so it won't be lost if power is removed.

COMMAND AND CONTROL DEFAULTS

Door♦Gard Command and Control keypads are designed for easy installation in a minimum amount of time. The following default settings are factory programmed:

Master Code (user 1):	**1234**
Main Relay Time:	**5 seconds**
Auxiliary Output Time:	**5 seconds**
Panic Output:	**Output 4**
Keypad Active Output:	**Off**
REX Triggers:	**Main Relay**
Keypress Feedback:	**On**
LED – Normal State	**Red**
LED - Relay Energized	**Green**
Auto-Entry	**Off**

If you must change the default settings or additional functions are desired, please refer to the Programming Options Chart after you are familiar with the Programming section.

2

PROGRAMMING

	Indicator[1]
1. Enter programming mode	
Press 99 # (master code) *	Flash/Beep Slowly
2. To Change master code[2]	
Press 1 # (new master code) *	Flash/Beep Fast
Press (new master code) *	Flash/Beep Slowly
If you must change the Main Relay time, see option 2 on the Programming Options chart.	
3. To Add/change second code	
Press 2 # (new user code) *	Flash/Beep Fast
Press (new user code) *	Flash/Beep Slowly
4. To Add/change third code	
Press 3 # (new user code) *	Flash/Beep Fast
Press (new user code) *	Flash/Beep Slowly
5. Up to 120 codes may be added in this fashion	
6. Exit programming mode	
Press *	Off

NOTES:

- Door♦Gard Command and Control keypads are factory programmed with a master code of 1234.
- **[1]Indicator refers to either the yellow LED or sounder.**
- **[2]The master code is always stored in user location 1.**
- The master code allows access to programming mode and activates the main relay.
- By default (auto-entry is off), all codes must be followed by the * key.
- Codes may be from 1-6 digits in length, and digits may be repeated.
- **If you forgot the master code or it is not working**, momentarily push SW1, (see wiring diagram for location) to enter programming mode and go to option #19 on the Programming Options chart to default keypad.
- If the yellow LED lights **solid** or sounder is on steady while in programming mode, an error has occurred. Press * to clear (yellow LED should start flashing) and start over from step 2 or 3 above.

PROGRAMMING OPTIONS CHART

If the pre-programmed default values must be changed or additional functions are desired, the following options may be programmed.

1. Enter programming mode	Press	99 # (master code) *
2. Change master code/set main relay time[1] **Example: Master code of 4321/relay time of 10 seconds**	Press **Press**	(time) # 1 # (new code) * (new code) * **10 # 1 # 4321 * 4321 ***
3. Add/change user code	Press	(user number) # (new code) * (new code) *
4. Add/change user code to toggle main relay[1]	Press	(00) # (user number) # (new code) * (new code) *
5. Delete user codes	Press	(user number) # * *
6. Set output 2 time[1]	Press	12 # (Relay Time) # 0 # **
7. Set output 3 time[1]	Press	13 # (Relay Time) # 0 # **
8. Set output 4 time[1]	Press	14 # (Relay Time) # 0 # **
9. Set outputs for Remote Triggering Input	Press	17 # (outputs: 1, 2, 3 and/or 4) # 0 # **
10. Set outputs for Panic	Press	18 # (outputs: 1, 2, 3 and/or 4) # 0 # **
11. Turn keypress feedback/audible keypress on	Press	30 # 0 # 1 # * *
12. Turn keypress feedback/audible keypress off	Press	30 # 0 # 0 # * *
13. Turn yellow LED/sounder on with relay	Press	30 # 1 # 1 # * *
14. Turn yellow LED/sounder off with relay	Press	30 # 1 # 0 # * *
15. Turn auto entry on	Press	30 # 2 # 1 # * *
16. Turn auto entry off	Press	30 # 2 # 0 # * *
17. Turn keypad active on[2]	Press	43 # 0 # 99 # * *
18. Turn keypad active off	Press	43 # 0 # 00 # * *
19. Erase keypad memory/reset defaults	Press	46 # 00000 # 00000 # * *
20. Energize selected output(s) with a user code[3] **Example: User 2; code 4321; energize outputs 2 & 3**	Press **Press**	59 # (outputs 1, 2, 3 and/or 4) # user location # (new code) * (new code) * **59 # 23 # 2 # 4321 * 4321***
21. Exit programming mode	Press	*

NOTES:

1. Relay times must always be represented by 2 digits. Example: 5 seconds = 05. Latching /toggle is accomplished by entering a time of 00.

2. Keypad active is a negative voltage output (sink) available on terminal (or wire) marked WB (see wiring diagrams for location).

3. This feature does not work with the master code.

If this product does not seem to operate properly, please call our Technical Support Department toll free at 1-800-343-9502 (or 781-821-5566) Monday-Friday 8:00 A.M. – 7:00 P.M. EST. We understand your time is valuable and we know that calling our Technical Support Department will ensure that you'll make the most profit possible with your IEI product. Thank you for your purchase. We appreciate your business.

International Electronics, Inc. (IEI) warrents its products to be free from defects in material and workmanship when they have been installed in accordance with the manufacturer's instructions and have not been modified or tampered with. IEI does not assume any responsibility for damage or injury to person or property due to improper care, storage, handling, abuse, misuse, normal wear and tear or an act of God.

IEI's sole responsibility is limited to the repair (at IEI's option), the replacement of the defective product or part when sent to IEI's facility (freight and insurance charges prepaid), after obtaining IEI's Return Merchandise Authorization. IEI will not be liable to the purchaser or any one else for incidental or consequential damages arising from any defect in, or malfunction of, it's products.

This warranty shall expire two years after shipping date. Except as stated above, IEI makes nor warranties, either expressed or implied, as to any matter whatsoever, including, without limitation to, the condition of its products, their merchantability, or fitness for any particular reason.

International Electronics Inc.

International Electronics, Inc.
427 Turnpike St, Canton, MA 02021 U.S.A.
800-343-9502, 781-821-5566, 781-821-4443 (FAX)
Fax Information Center 781-821-0734 (From Your FAX machine)

212i Wiring Diagrams and Specifications

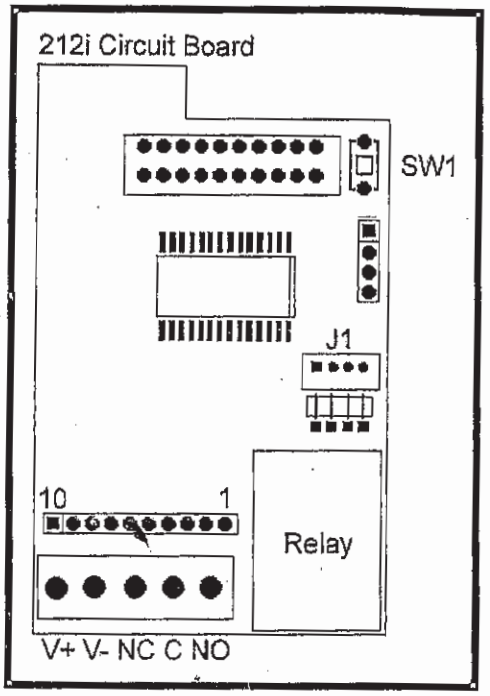

212i Wire Harness

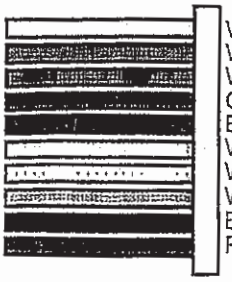

White: Not Used
Wht/Blue: Output 3 V- (50mA sink)
Wht/Red: Output 2 V- (50mA sink)
Orange: Output 4/Panic V- (50mA sink)
Brown: REX Input
Wht/Orange: REX Input
Wht/Black: K (in) Keypad Active
Wht/Yellow: K (out)
Black: Ground (Output Only)
Red: V+ (Output Only)

Note: The red wire is the same voltage as your power supply. If you're using AC, this voltage is rectified (DC).

TECHNICAL NOTES

This product was re-designed using a new manufacturing technology, which changed the physical appearance of the keypad electronics. The LED's changed to surface mount chip LED's mounted on bottom of the circuit board which eliminates the need for the wire harnesses. It is also possible to control the red and green chip LED's externally, with an alarm panel for example, by using connector J1. See the diagram for details. Also, the voltage selection jumper on the main circuit board is no longer required.

To prevent electrical kick back voltage from damaging the keypad, when using an electrical locking device, you MUST install the transorb as close as possible to the lock. Wire the transorb in parallel with the lock power terminals.

Also, to avoid ESD (electro-static discharge) from interfering with the operation of the keypad, ground the negative terminal of the keypad to earth ground. If you cannot ground the power supply, then you must ground the keypad housing.

IEI recommends using a filtered and regulated power supply

SPECIFICATIONS:

MECHANICAL:
BOARD DIMENSIONS: 1.80"W x 2.845"H x 1.125"D

ELECTRICAL:
VOLTAGE: 12-24 Volts AC/DC **(No Jumper Required)**
CURRENT: 8mA@12VDC typical;
35ma with relay energized.
16mA@24VDC typical;
45ma with relay energized.
21mA@12VAC typical;
74mA with relay energized.
43mA@24VAC typical;
91mA with relay energized.
Note: Keypads using the 293 Relay Board, need an additional 30mA for each relay energized.
OUTPUTS: Main Relay: 5 Amp, Form C @ 24VDC with 10 Amp surge.
Outputs 2, 3, and 4 are 50mA negative voltage outputs

ENVIRONMENTAL:
TEMPERATURE: -20°F TO 130°F (-28°C TO 54°C)
Indoor Only

Packing Checklist

212i Keypad
10 Conductor Wire Harness (1)
4 Conductor Wire Harness (1)
Slotted screws (2)
Security Screws (2)
Transorb (1)
Features & Programming Guide
Warranty Guide

293 Auxiliary Relay Board

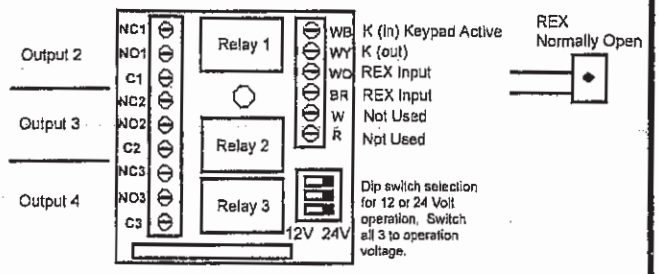

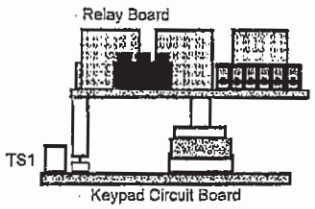

The IEI 293 plug-on relay board converts voltage outputs to 1 Amp, Form C relays and provides screw terminals for all inputs and outputs.
The 293 fits into a standard 2" electrical box with the keypad.

Basic Access Control with an Electromagnetic Door Lock

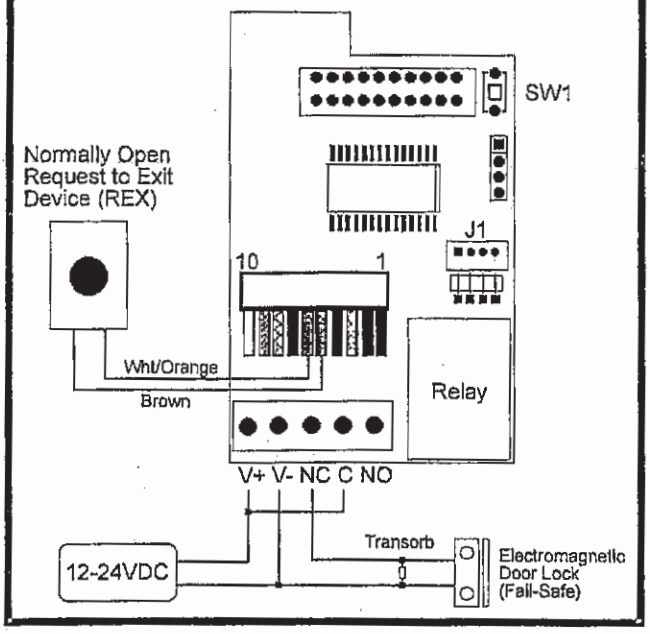

Basic Access Control with an Electric Door Strike

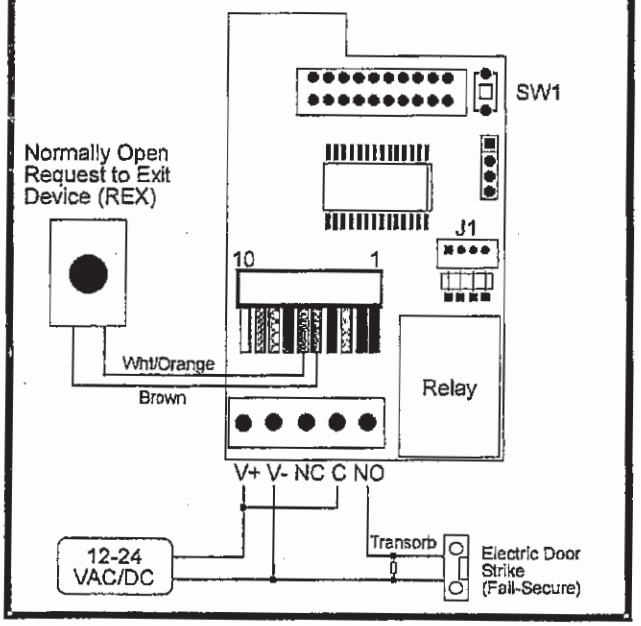

Shunting a Normally Closed Zone and Wiring a Request to Exit Device (REX)

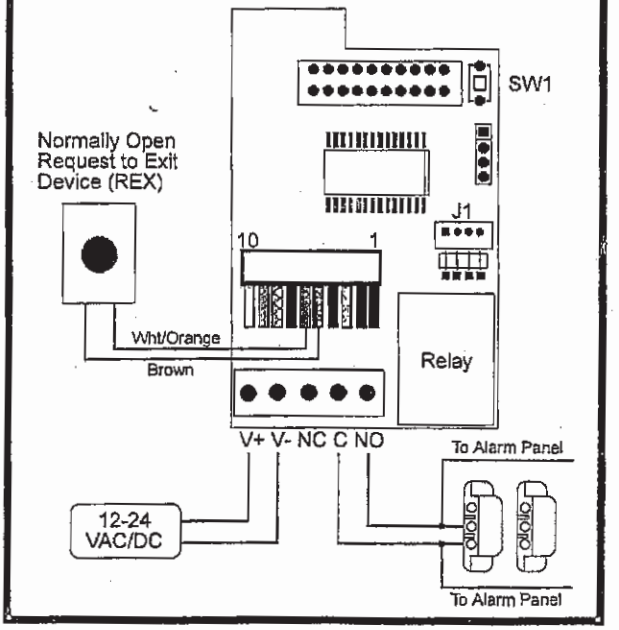

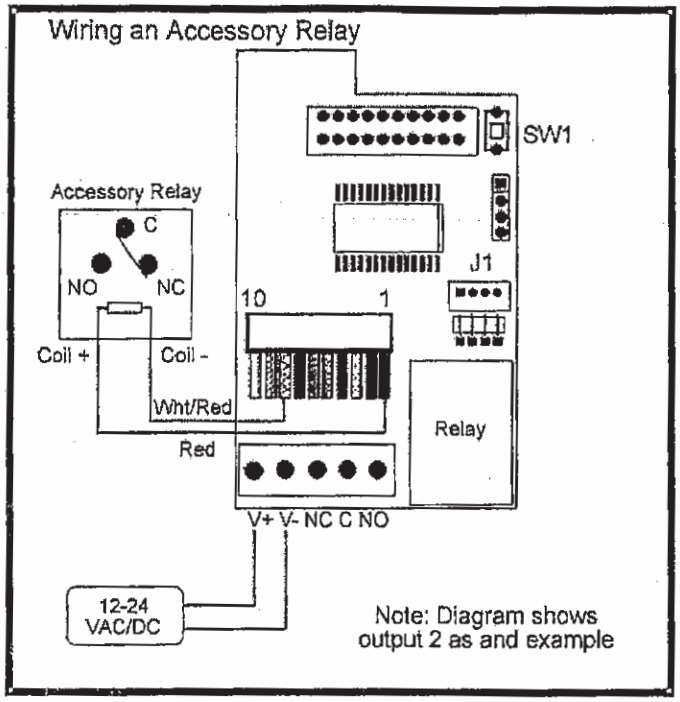

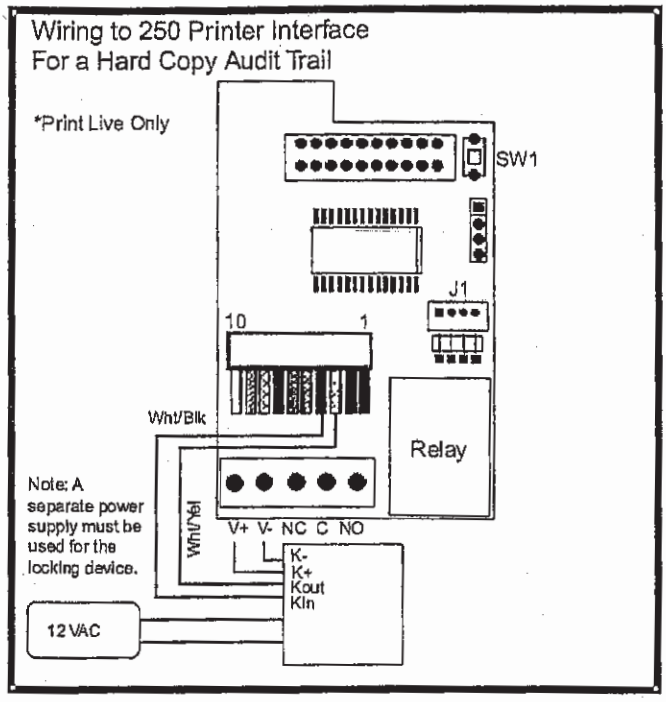

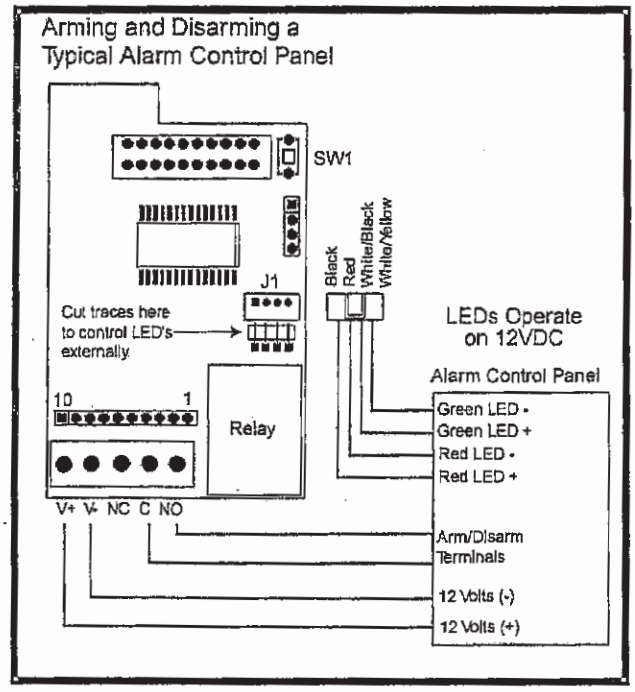

To control the LED's externally cut the four traces in the box underneath connector J1. Before connecting the alarm panel's LED control lines to J1 verify the traces are cut. To verify, measure continuity between the end of the wire on the wire harness and the square pad on the circuit board below the box corresponding to the wire you're measuring. **Permanent damage to the keypad may result if voltage is connected to J1 when the traces are not cut.**

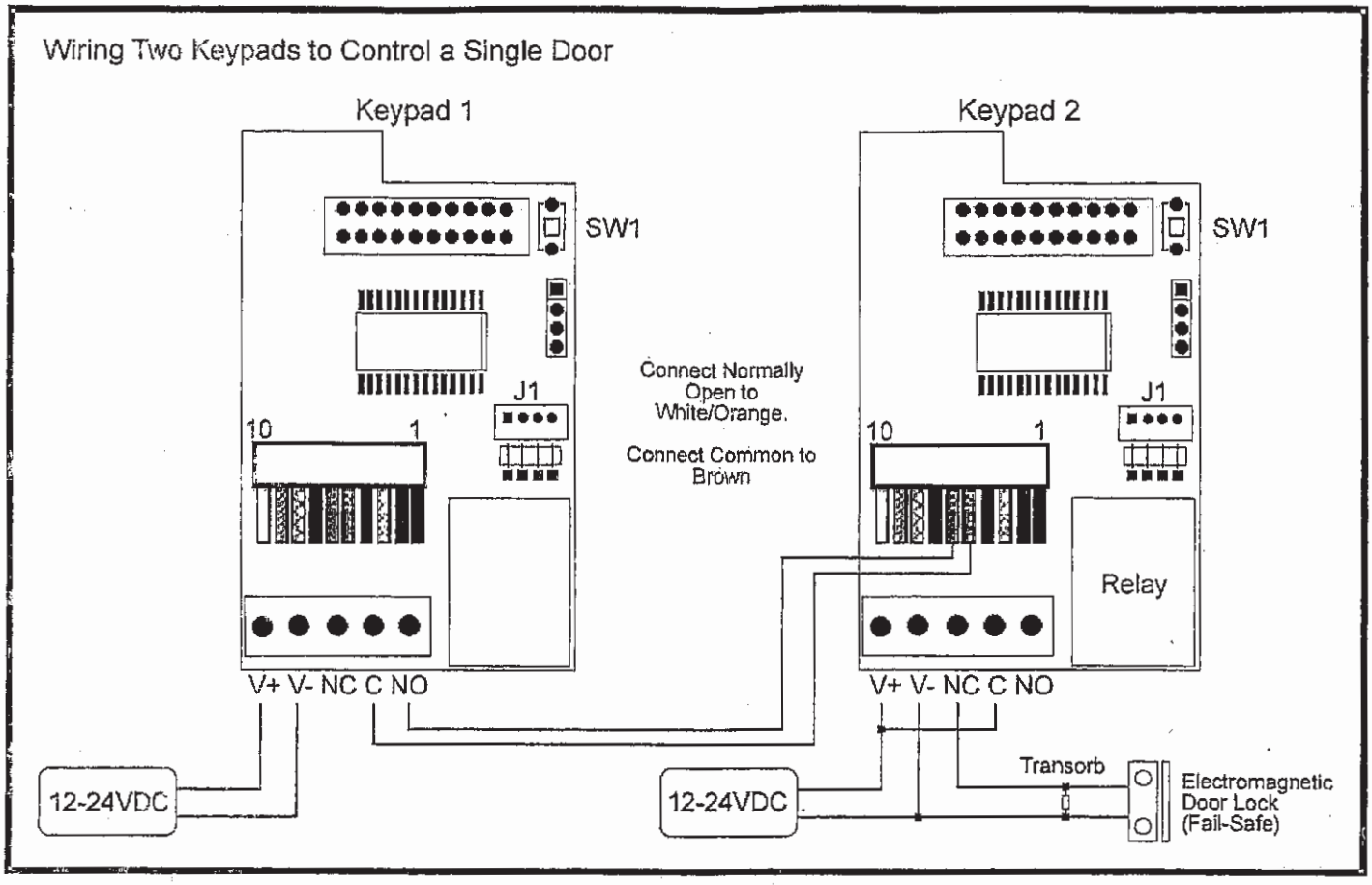

The diagram above shows how to connect two keypads to control a single door. Entering your code on keypad 2 unlocks the maglock directly. When you enter your code on keypad 1, it triggers the REX input of keypad two, which unlocks the door

Please note that user codes must be programmed into both keypads

INTERNATIONAL ELECTRONICS, INC.
427 TURNPIKE STREET
CANTON, MA 02021 USA
800-343-9502, 781-821-5566,
781-821-4443 (FAX)
WEB ADDRESS: www.ieib.com

International Electronics Inc.