LZR®-WIDESCAN

MOTION, PRESENCE & SAFETY SENSOR FOR INDUSTRIAL DOORS

PRIMARY APPLICATIONS

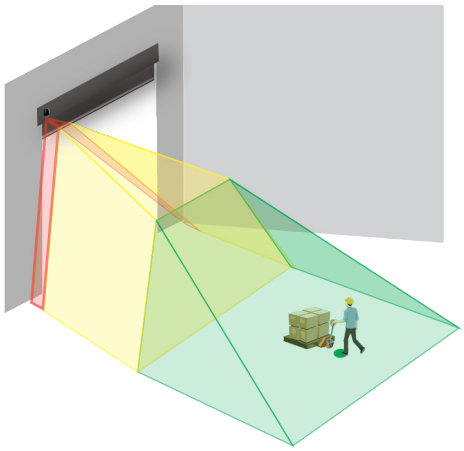

DESCRIPTION

BEA's LZR-WIDESCAN is a LASER-based, time-of-flight sensor used for motion, safety and presence detection in a variety of industrial door applications. This all-in-one solution offers the benefits of activation and safety, while reducing installation time.

This NEMA 4 rated sensor creates a volumetric detection area by generating seven angled LASER curtains. It has the ability to detect objects based on direction, speed, object size and height.

The LZR-WIDESCAN detection field operates independent of ground conditions, allowing for superior functionality in harsh environments.

FEATURES & BENEFITS

- Precise activation zones allows for installers to walk the desired detection area
- Promotes energy savings by reducing false detections / unnecessary door cycling, helping to regulate HVAC
- Virtual pull-cord function can differentiate between pedestrian and vehicle traffic and can provide pulse-on-stop activation
- Ideal for replacing costly / labor-intensive induction loop and pull-cord solutions
- Two visible LASER alignment spots ensure accurate pattern placement

BEA, Inc.
RIDC Park West
100 Enterprise Drive
Pittsburgh, PA 15275-1213

Customer Service: 800.523.2462
Technical Support: 800.407.4545
www.BEAinc.com

APPLICATIONS

DYNAMIC GROUND CONDITIONS

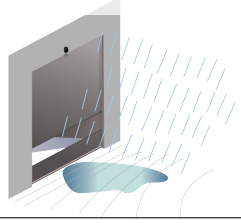

PEDESTRIAN SAFETY

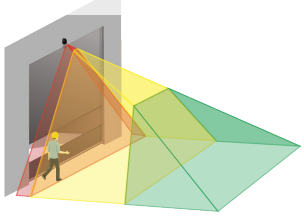

DIRECTIONALITY

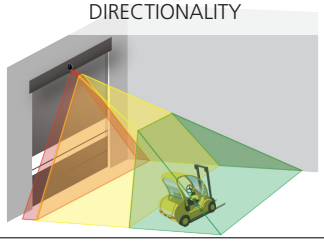

FULL-OPEN / PARTIAL-OPEN

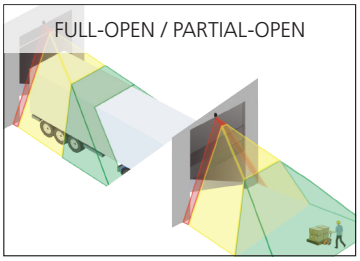

TECHNICAL SPECIFICATIONS

Technology	LASER scanner, Time-of-Flight measurement (7 LASER curtains)
Detection Mode	Motion and Presence
Max. Detection Field	Width: 1.2 x mounting height Depth: 1.2 x mounting height (adjustable depending on user settings)
Thickness of First Curtain	¾ inch per 3 feet of mounting height
Typ. Mounting Height	6'6" – 19'6"
Typ. Minimum Object Size	6" @ 19'6" (in proportion to object distance)
Test Body Dimensions	27 ½" × 11 ¾"× 7 ¾"
Min. Reflectivity Factor	> 2 % (of floor and object) (measured at max. 19'6" in safety field)
Emission Characteristics	
IR LASER	Wavelength 905 nm; maximum output pulse power 75 W, Class 1
Visible LASER	Wavelength 650 nm; maximum output CW power 3 mW, Class 3R
Supply Voltage	12 – 24 VAC ±10% 12 – 30 VDC ±10% @ sensor terminal
Power Consumption	< 2.5 W (heating: off) < 15 W (heating: eco or auto)
Response Time	Typ. 100 ms (max. 500 ms)
Output	2 solid-state relays (galvanic isolation, polarity free) 30 VDC (max. switching voltage) – 100 mA (max. switching current) - in switching mode: NO/NC - in frequency mode: pulsed signal (f= 100 Hz ±10%) 1 electro-mechanic relay (galvanic isolation, polarity free) 42 VAC (max. switching voltage) – 500 mA (max. switching current)
Input	30 VDC (max. switching voltage) low < 1 V high > 10 V (voltage threshold)
LED-Signal	2 tri-colored LEDs: Output status / Remote Control Response / Error Signals
Dimensions	7 ¾" (H) x 6" (W) x 4" (D) (approx.)
Material / Color	PC/ASA / Black
Rotation Angles on Bracket	45° to the right, 15° to the left (lockable)
Tilt Angles on Bracket	–10° – 5°
Degree of Protection	NEMA 4 / IP65
Temperature Range	–22 °F – 140 °F (–30 °C – 60 °C)
Vibrations	< 2 G
Cable Length	360 in (30 ft)
Norm Conformance	IEC 61000-6-2, IEC 61000-6-3, IEC 60950-1, IEC 60825-1, ISO 13849-1 PI "d"/ CAT2, IEC 62061 SIL 2, IEC 61496-1 ESPE Type 2

DIMENSIONAL DRAWINGS

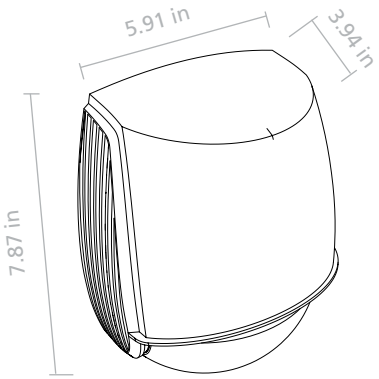

RELATED PRODUCTS

10LZRWIDESCAN
MOTION, PRESENCE & SAFETY SENSOR

10.1311
WIDESCAN ADAPTER KIT

20.5402
50 FT CABLE

20.5399
30 FT CABLE

© 2019 BEA, Inc. All rights reserved.

BEA, Inc.
RIDC Park West
100 Enterprise Drive
Pittsburgh, PA 15275-1213

Customer Service: 800.523.2462
Technical Support: 800.407.4545